Chapter 12

1. A carpenter's square has the shape of an L as shown in Figure P12.3. Locate its center of gravity.

Ans:

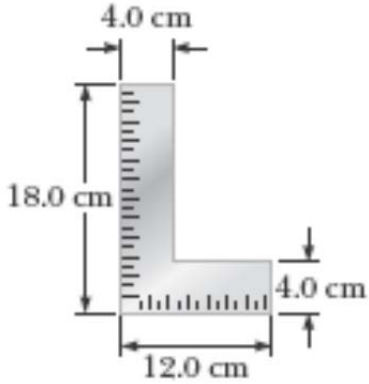

Figure P12.3

2. Find the mass m of the counterweight needed to balance a truck with mass M = 1 500 kg on an incline of θ = 45° (Fig. P12.9). Assume both pulleys are friction-less and massless.

Ans:

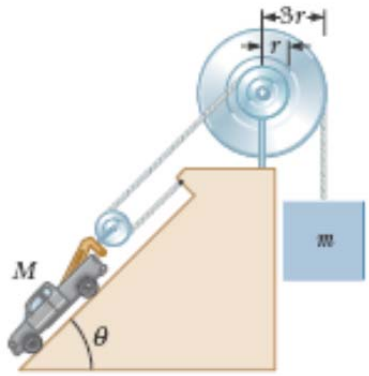

Figure P12.9

3. A uniform beam of length 7.60 m and weight 4.50×10^2 N is carried by two workers, Sam and Joe, as shown in Figure P12.11. Determine the force that each person exerts on the beam.

Ans:

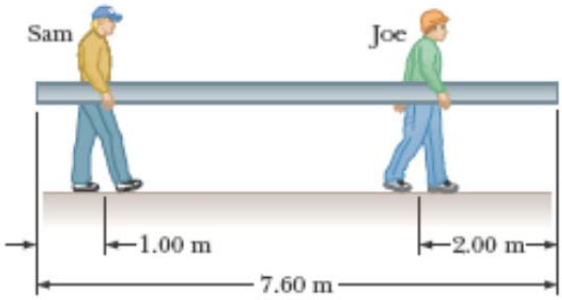

Figure P12.11

4. A steel wire of diameter 1 mm can support a tension of 0.2 kN. A steel cable to support a tension of 20 kN should have diameter of what order of magnitude?

Ans:

5. A 1 200-N uniform boom at $\phi = 65^{\circ}$ to the vertical is supported by a cable at an angle $\theta = 25.0^{\circ}$ to the horizontal as shown in Figure P12.46. The boom is pivoted at the bottom, and an object of weight m = 2 000 N hangs from its top. Find (a) the tension in the support cable and (b) the components of the reaction force exerted by the floor on the boom.

Ans:

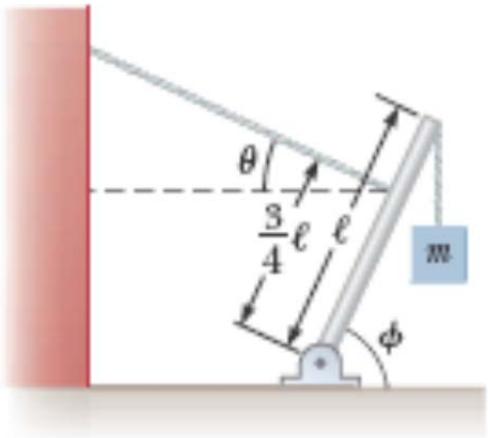

Figure P12.46